Instructions

Stemless Crush Grind® Salt and Pepper Mill

Diagram A - Preparing the Blanks

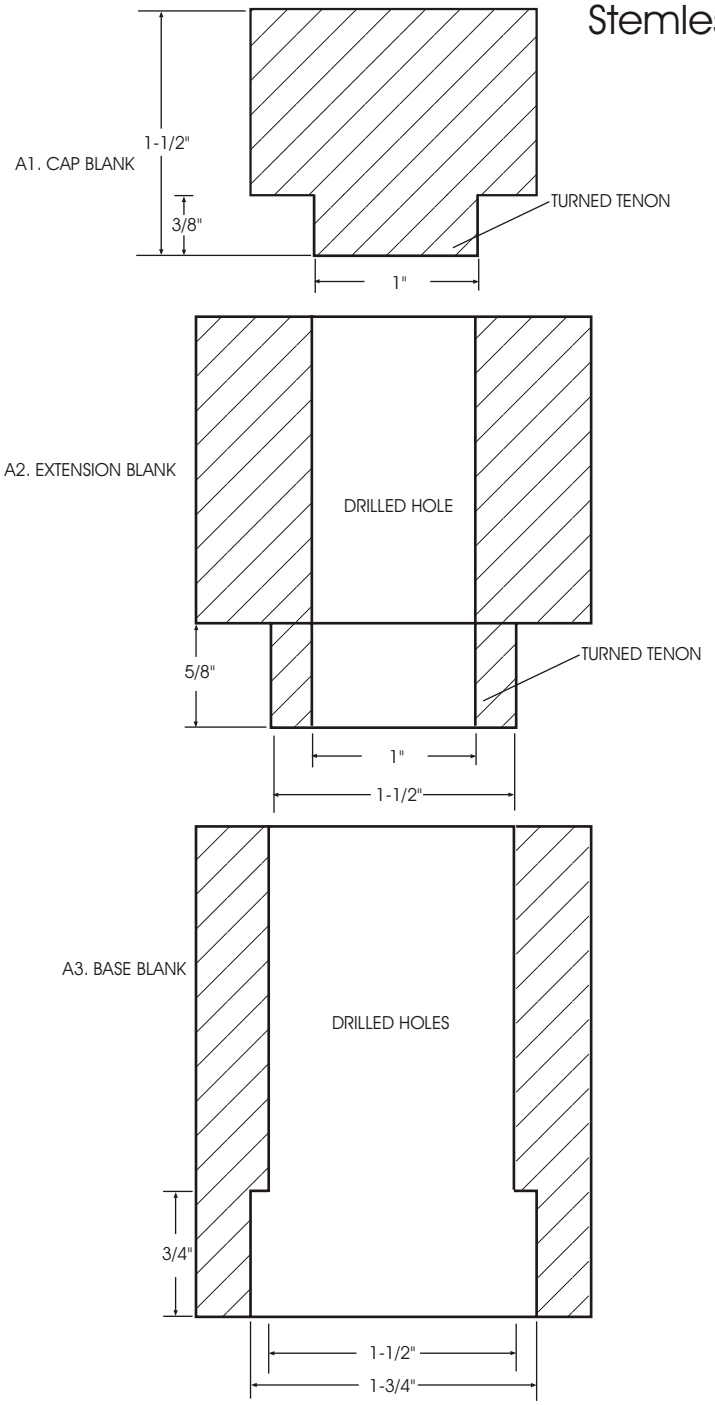

Required Accessories

- 1" Forstner bit
- 1-1/2" Forstner bit
- 1-3/4" Forstner bit
- Forstner bit extender

Required Wood

- *Base blank* - 2-1/4" square (minimum) x 3" long.
- *Extension blank* - 2-1/4" square (minimum) x 3" long.
- *Cap blank* - 2-1/4" square x 1-1/2" long.

Drilling the Blanks (see Diagram A)

- *Base blank* (see A3) - Locate the center of the blank and drill sequential holes:
  1. Drill a 1-3/4" hole to 3/4" deep
  2. Drill a 1-1/2" hole through (use drill bit extender)
- *Extension blank* - Locate the center of the blank and drill a 1" hole through.

Turning the Blanks

Extension Blank (See A2)

- Use a jam chuck with a 1" diameter.
- Mount the jam chuck on head stock, then insert into the blank.
- Support the opposite end with a large live center.
- Turn to round and mark 5/8" from the edge.
- Turn end 5/8" long to a 1-1/2" diameter recess/tenon.

Diagram B - Turning the Blanks

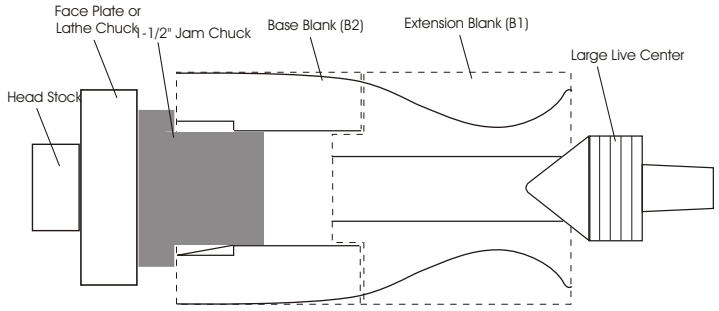

Diagram C - Assembly

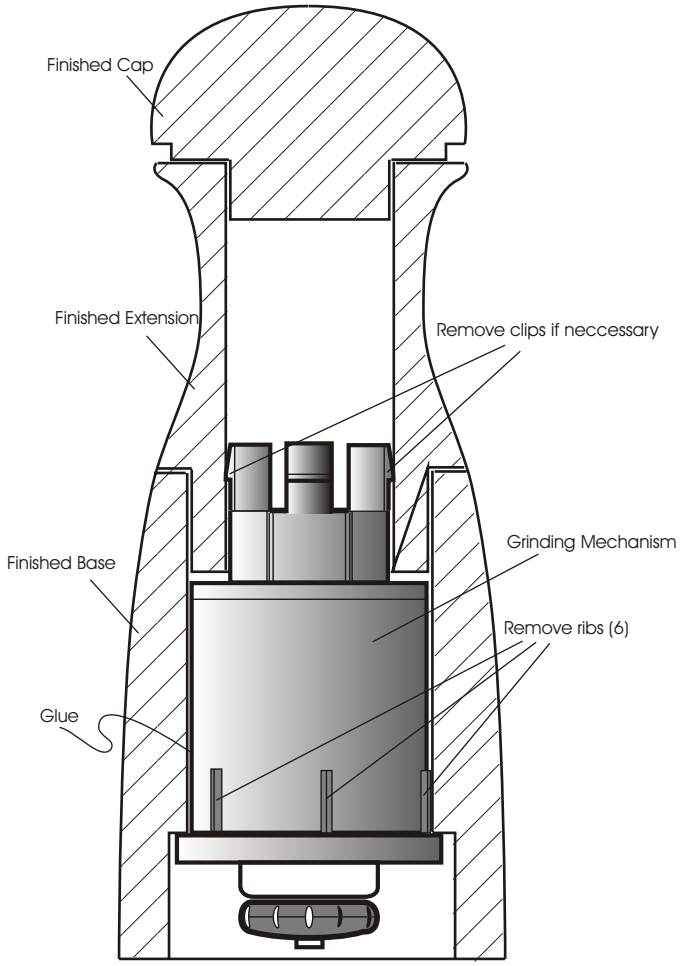

Base Blank (See Diagram B)
- Insert the extension blank's recessed end into the base blank. Use a 1-1/2" jam chuck to mount this assembly on the lathe.
- Support opposite end using a large live center.
- Turn both blanks together to a final profile, sand, and finish the wood.

Cap Blank (See A1 and Diagram C)
- Mount 2" square blank in a chuck and turn round. Turn a tenon/recess at least 3/8" long to a 1" diameter.
- Make sure the tenon fits snugly in the 1" hole in the extension blank.
- Reverse the blank in the chuck, turn it into a cap profile, sand, and finish.

Assembly (see Diagram C)
- *NOTE:* The mechanism is designed to fit in metric holes. In order To fit in standard holes, some modifications to the mechanisms are necessary.
- Remove the 6 ribs over the surface of the grinding mechanism.
- Remove the edge of the clips (if necessary).
- Insert mechanism into the base prior to gluing to check the fit.
- Carefully glue over the outer surface of the mechanism, avoiding any moving parts. Insert and press firmly into the 1-1/2" hole.
- Press the finished extension over the exposed fingers of the mechanism for a snug press fit. The tenon should slide into the 1-1/2" hole in the base and turn freely.

Using the Grinder
- Fill the grinder with pepper or salt and insert end cap on the top.
- To adjust the coarseness of the grind, just twist the gray knob in or out.
- Twist the unit to grind.

© 2005 PSI Woodworking Products Courtesy of The Wooden Post, Inc.